Safety Instructions & Operator's Manual for

SNAPPER®

21" STEEL DECK WALK MOWERS SERIES 17

PROPELLED MODELS
FRP2167517BV

MODEL NUMBER EXPLANATION

F	R	P	21	675	17	BV

MODEL DESIGNATION
SELF-PROPELLED
CUTTING WIDTH
ENGINE DESIGNATION
SERIES DESIGNATION
ENGINE HORSE POWER

F – Flange Type Deck	R – Recycling Model
P – Self Propelled Model	
21 – 21" Cutting Width	

675 – 6.75 HP (Engine Horse Power)
17 – Series Designation
B – Briggs & Stratton
V – Over Head Valve Engine

Thank you for buying a SNAPPER Product! Before operating your Walk Behind, read this manual carefully and pay particular attention to the "IMPORTANT SAFETY INSTRUCTIONS" on Pages 2 & 3. Remember that all power equipment can be dangerous if used improperly. Also keep in mind that SAFETY requires careful use in accordance with the operating instructions and common sense.

SNAPPER® McDonough, GA., 30253 U.S.A.

COPYRIGHT © 2001
SNAPPER INC.
ALL RIGHTS RESERVED

MANUAL No. 7-4352 (I.R. 2/13/01)

IMPORTANT SAFETY INSTRUCTIONS

WARNING: This powerful cutting machine is capable of amputating hands and feet and can throw objects that can cause injury and damage! Failure to comply with the following SAFETY instructions could result in serious injury or death to the operator or other persons. The owner of the machine must understand these instructions and must allow only persons who understand these instructions to operate machine. Each person operating the machine must be of sound mind and body and must not be under the influence of any substance, which might impair vision, dexterity or judgment. If you have any questions pertaining to your machine which your dealer cannot answer to your satisfaction, call or write the Customer Service Department at SNAPPER, McDonough, Georgia 30253. Phone: (1-800-935-2967).

PROTECTION FOR CHILDREN

Tragic accidents can occur if the operator is not alert to the presence of children. Children are often attracted to the machine and the mowing activity. Never assume that children will remain where you last saw them.

1. **KEEP children out of the mowing area and under the watchful care of a responsible adult.**
2. **DO NOT allow children in yard when machine is operated and turn machine OFF if anyone enters the area.**
3. **DO NOT allow pre-teenage children to operate machine.**
4. **ALLOW only responsible adults & teenagers with mature judgment under close adult supervision to operate machine.**
5. **DO NOT pull mower backwards unless absolutely necessary. LOOK and SEE behind and down for children, pets and hazards before and while backing.**
6. **USE EXTRA CARE when approaching blind corners, shrubs, trees, or other objects that may obscure vision.**

SLOPE OPERATION

1. **Slopes are a major factor related to slip and fall accidents, which can result in severe injury. All slopes require extra caution. If you feel uneasy on a slope, DO NOT mow it.**
2. **Mow across slopes, never up-and-down. Exercise extreme CAUTION when changing directions on slopes. DO NOT mow steep slopes or other areas where stability or traction is in doubt.**
3. **Use extra care with grass catchers or other attachments; these affect the handling and the stability of the machine.**

PREPARATION

1. **Read, understand, and follow instructions and warnings in this manual and on the mower, engine and attachments. Know the controls and the proper use of the mower before starting.**
2. **Only mature, responsible persons shall operate the machine and only after proper instruction.**

PREPARATION

(Continued From Previous Column)

3. **Data indicates that operators age 60 and above, are involved in a large percentage of mower-related injuries. These operators should evaluate their ability to operate the mower safely enough to protect themselves and others from serious injury.**
4. **Handle fuel with extra care. Fuels are flammable and vapors are explosive. Use only an approved fuel container. DO NOT remove fuel cap or add fuel with engine running. Add fuel outdoors only with engine stopped and cool. Clean spilled fuel and oil from machine. DO NOT smoke.**
5. **Check the area to be mowed and remove all objects such as toys, wire, rocks, limbs and other objects that could cause injury if thrown by blade or interfere with mowing. Also note the location of holes, stumps, and other possible hazards.**
6. **Keep people and pets out of the mowing area. Immediately, STOP Blade, Stop engine and Stop mower if anyone enters the area.**
7. **Check shields, deflectors, switches, blade controls and other safety devices frequently for proper operation and location.**
8. **Make sure all safety decals are clearly legible. Replace if damaged.**
9. **Protect yourself when mowing and wear safety glasses, long pants and substantial footwear. DO NOT mow barefooted or with sandals.**
10. **Know how to STOP blade and engine quickly in preparation for emergencies.**
11. **Use extra care when loading or unloading the machine into a trailer or truck.**
12. **Check grass catcher components frequently for signs of wear or deterioration and replace as needed to prevent injury from thrown objects going through weak or torn spots.**

IMPORTANT SAFETY INSTRUCTIONS

OPERATION

1. DO NOT put hands or feet near or under rotating parts. Keep clear of discharge area while engine is running.
2. STOP engine when crossing gravel drives, walks, or roads, and under any conditions where thrown objects might be a hazard.
3. Mow only in daylight or good artificial light.
4. DO NOT operate mower while under the influence of alcohol or drugs.
5. After striking a foreign object or if mower vibrates abnormally, STOP the engine, disconnect and secure spark plug wire. Inspect the mower for any damage and repair the damage.
6. DO NOT mow near drop offs, ditches or embankments. Operator could lose footing or balance.
7. STAY ALERT for holes and other hidden hazards. Tall grass can hide obstacles. Keep away from ditches, washouts, culverts, fences and protruding objects.
8. DO NOT mow on wet grass. Always be sure of your footing. Keep a firm hold on the handle and walk, never run. Slipping could cause injury.
9. DO NOT leave the machine with the engine running. STOP BLADE and STOP ENGINE before leaving the operators position for any reason.
10. Before cleaning, repairing or inspecting make certain engine, blade and all moving parts have STOPPED. Disconnect and secure spark plug wire away from plug to prevent accidental starting.
11. STOP engine and wait until the blade comes to complete STOP before removing grass bag and/or clearing grass.
12. DO NOT operate mower without the entire grass catcher or guards in place. DO NOT point discharge at people, passing cars, windows or doors.
13. Slow down before turning.
14. Watch out for traffic when near or crossing roadways.
15. DO NOT operate engine in enclosed areas. Engine exhaust gases contain carbon monoxide, a deadly poison.

MAINTENANCE AND STORAGE

1. DO NOT store mower or fuel container inside where fumes may reach an open flame, spark or pilot light such as in a water heater, furnace, clothes dryer or other gas appliance. Allow engine to cool before storing machine in an enclosure. Store fuel container out of reach of children in a well ventilated, unoccupied building.
2. Keep mower and engine free of grass, leaves or excess grease to reduce fire hazard and engine overheating.
3. When draining fuel tank, drain fuel into an approved container outdoors and away from open flame.
4. Keep all bolts, especially blade bolts, nuts and screws properly tight. Check that all cotter pins are in proper position.
5. Always provide adequate ventilation when running engine. Engine exhaust gases contain carbon monoxide, a deadly poison.
6. Service engine and make adjustments only when engine is stopped. Removed spark plug wire from spark plug and secure wire away from spark plug to prevent accidental starting.
7. DO NOT change engine governor speed settings or overspeed engine.
8. Check grass bag assembly frequently for wear or deterioration to avoid thrown objects and exposure to moving parts. Replace with new bag if loose seams or tears are evident. Replace slider or bag adapter if broken or cracked.
9. Mower blades are sharp and can cut. Wrap the blades or wear heavy leather gloves and use CAUTION when handling them.
10. DO NOT test for spark by grounding spark plug next to spark plug hole; spark plug could ignite gas exiting engine.
11. Have machine serviced by an authorized SNAPPER dealer at least once a year and have the dealer install any new safety devices.
12. Use only genuine SNAPPER replacement parts to assure that original standards are maintained.

TABLE OF CONTENTS

IMPORTANT SAFETY INSTRUCTIONS ..... 2 - 3

TABLE OF CONTENTS 4

SECTION 1 - FAMILIARIZATION 5

SECTION 2 - OPERATING INSTRUCTIONS 6-8
- Pre-start Checklist 6
- Starting & Stopping Engine & Blades 6
- Starting & Stopping Wheel Drive 7
- Handle Height Adjustment 7
- Cutting Height Adjustment 7
- Recycling Operation 8
- Baffle Adjustment 8
- Installation of Grass Catcher 8
- Installation of Discharge Deflector 9

SECTION 3 - MAINTENANCE INSTRUCTIONS 10-11
- Change Engine Oil 10
- Check Transmission Grease 10-11
- Check Mower Blade 11
- Check Engine Drive Belt 11
- Check Transmission Poly-V Belt 11
- Service - Annually 11
  - Engine 11
  - Air Filter 11
  - Engine Oil 11
- Storage Procedure 11

SECTION 4 - ADJUSTMENTS AND REPAIR 12-18
- Mower Blade Replacement 12
- Blade Sharpening 12-13
- Wheel Drive Control Adjustment 13
- Driven and Drive Disc Service 13
  - Cleaning Drive Disc and Driven Disc 14
  - Drive Spring Repair/Replacement 14
  - Driven Disc Adjustment 14-15
  - Driven Disc Replacement 15
  - Driven Disc Bearing Replacement 16
  - Hex Shaft Bearing Replacement 17
- Belt Service 17
  - Engine Drive Belt Replacement 17-18
  - Transmission Poly-V Belt Replacement 18

TROUBLESHOOTING 19

SERVICE SCHEDULE 20

WARRANTY 20

PRIMARY MAINTENANCE 22-25

IMPORTANT

The figures and illustrations in this manual are provided for reference only and may differ from your specific model. Contact your Snapper dealer if you have questions.

Section 1 - FAMILIARIZATION

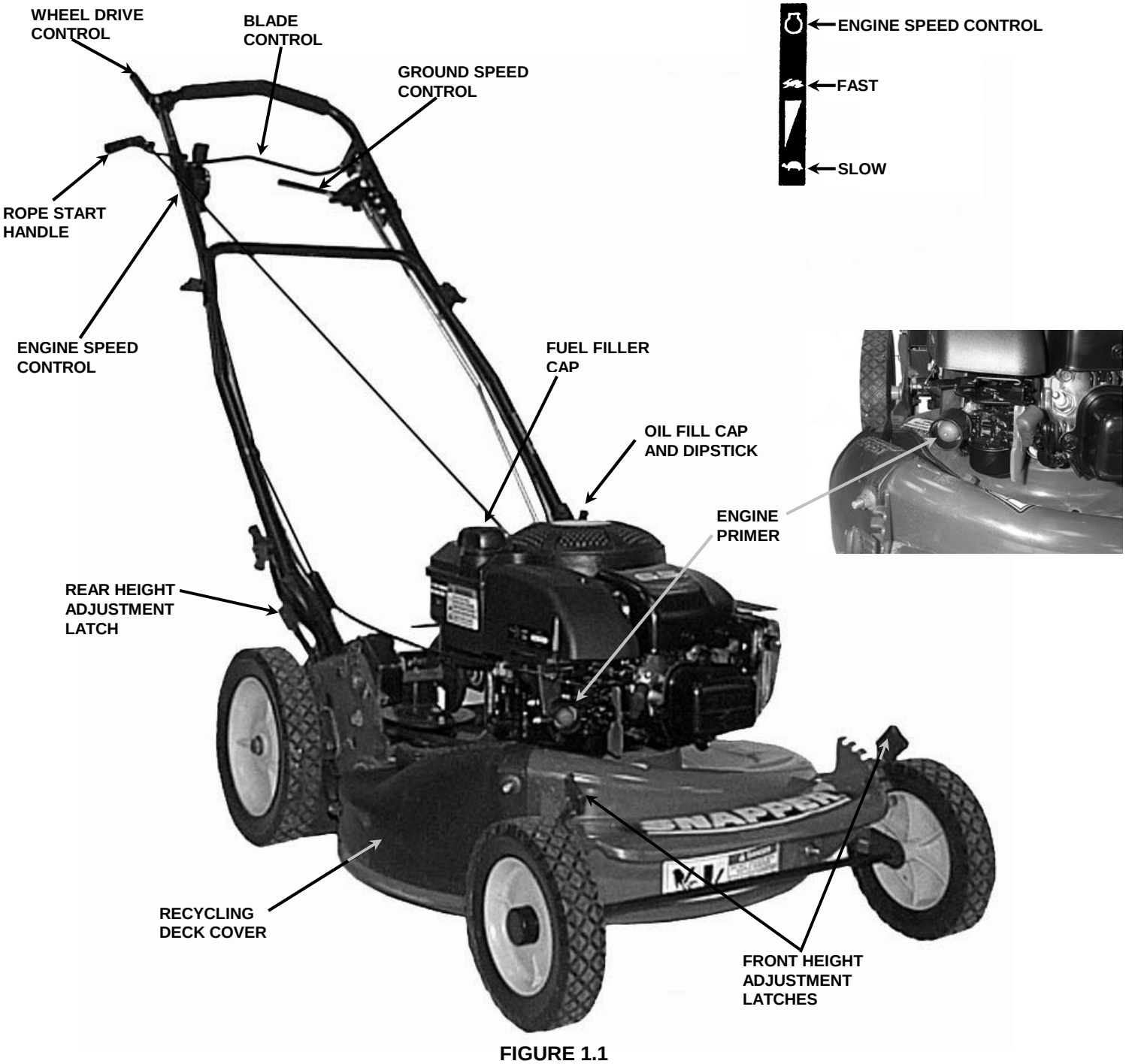

FIGURE 1.1

1.1 INTRODUCTION

This manual has been prepared for the operators of the SNAPPER WALK BEHIND MOWERS. Its purpose, aside from recommending operating and routine service requirements, is to promote safety through the use of accepted operating practices. **Read, Understand and Follow** the “IMPORTANT SAFETY INSTRUCTIONS” on Pages 2 & 3 of this manual and all safety messages on the mower and attachments before operating the mower.

1.2 NOMENCLATURE

The nomenclature drawing above, Figure 1.1, shows the essential parts of the SNAPPER WALK BEHIND MOWERS. It is recommended that all operators of the mower become thoroughly familiar with the controls, parts and operation of the mower before operating. Specific details involving the engine are found in the separate engine owner’s manual. Study these manuals before operating and keep both handy for future reference.

Section 2 - OPERATING INSTRUCTIONS

2.1 PRE-START CHECK LIST

Make the following checks and perform the service required before each start-up.

2.1.1. Check guards, deflectors, grass bag, adapter and covers to make sure all are in place and securely tightened.

2.1.2. Check blade control and wheel drive control to insure they work freely. See Figure 2.1.

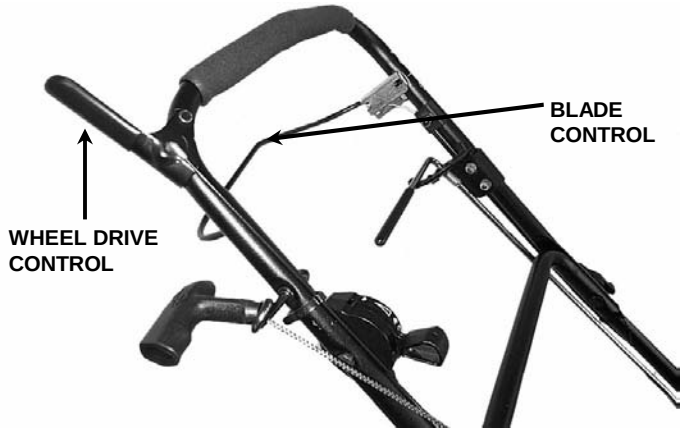

FIGURE 2.1

2.1.3. Check cutting height. Adjust to desired height.

2.1.4. Check engine oil and add oil as needed to bring level up to the full mark. Refer to Engine Owner's Manual for oil specifications. See Figure 2.2.

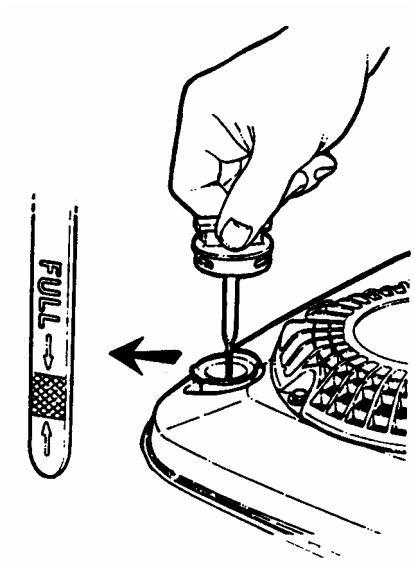

FIGURE 2.2

2.1.5. Add fuel to tank after pushing the mower outside where fumes can safely dissipate. Make sure cap is tightened after refueling. Refer to Engine Owners Manual for specifications.

2.1.6. Clean exterior surfaces of cutting deck and engine of any accumulation of spilled fuel, dirt, grass, oil, etc. Keep engine air intake screen and cooling fins clear at all times.

2.2 STARTING & OPERATION

2.2.1. ENGINE & BLADE (Primer Models)

1. Move engine speed control to the "Fast" (Rabbit) position. See Figure 2.3.

NOTE: Stop the engine (and blade) by releasing the blade control.

FIGURE 2.3

2. Push primer button three times to start a cold engine. **NOTE:** The primer should not be required to restart a warm engine. See Figure 2.4

3. Pull blade control against handle.

4. Pull rope start handle to crank engine.

5. After engine starts, allow a brief warm-up until engine runs smooth.

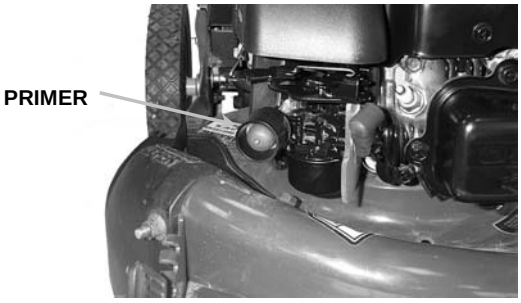

FIGURE 2.4

Section 2 - OPERATING INSTRUCTIONS

2.2.2. PROPELLING MOWER (Self Propelled Models Only)

1. Start engine. Refer to Section "Starting & Operation".

2. Move ground speed control to the desired speed position. See Figure 2.5.

3. Move wheel drive control against handle to engage wheel drive and propel mower forward. Forward speed can be adjusted while the mower is moving by changing position of the ground speed control. See Figure 2.5.

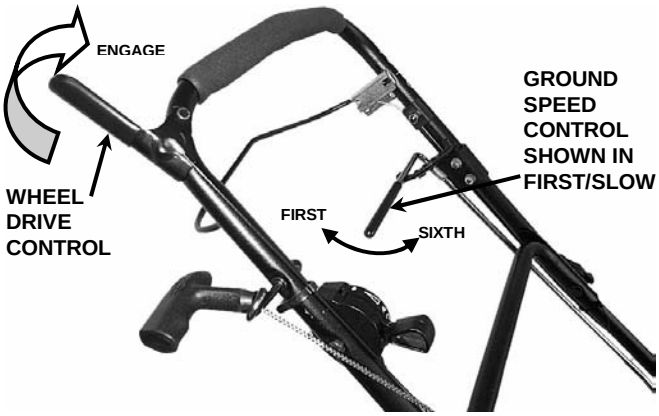

FIGURE 2.5

2.3 STOPPING

Stop engine and blade by releasing the blade control. Stop forward motion of mower by releasing the wheel drive control.

2.4 HANDLE HEIGHT ADJUSTMENT

The height of the mower handle can be adjusted as follows:

1. Loosen the lower nuts on each lower handle as shown in Figure 2.6.

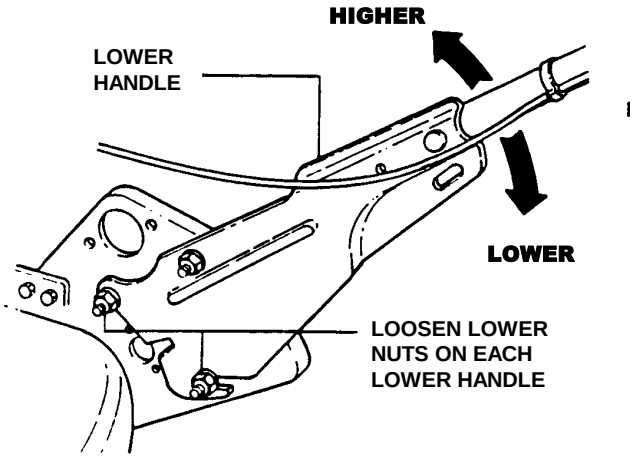

FIGURE 2.6

2. Move upper mower handle up or down until the desired position is achieved.

3. Tighten the lower nuts on each lower handle to maintain desired position.

WARNING

Stop engine and mower blade by releasing the blade control before adjusting cutting height.

2.5 CUTTING HEIGHT ADJUSTMENT

1. Pull the height adjusting latch outward and move to desired cutting height. See Figure 2.7.

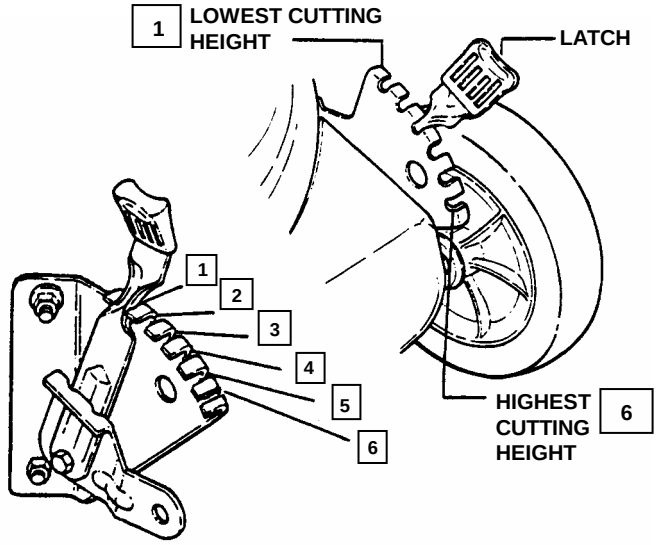

FIGURE 2.7

2. Set all wheels at the same cutting height. The highest cutting position is Notch 6. The lowest cutting position is Notch 1. See Figure 2.8.

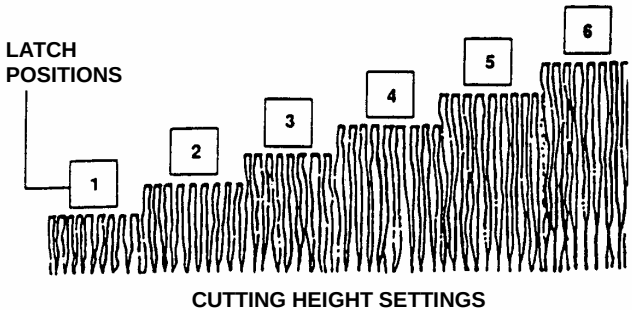

FIGURE 2.8

Section 2 - OPERATING INSTRUCTIONS

WARNING

DO NOT attempt any maintenance, adjustments or service with engine and blade running. STOP engine and blade. Disconnect spark plug wire and secure away from spark plug. Engine and components are HOT. Avoid serious burns, allow sufficient time for all components to cool.

2.6 RECYCLING OPERATION

NOTE: For best recycling results, cut up to a maximum of 1/3 of grass blade length and recycle ONLY when grass is dry.

1. Set all wheels in the highest cutting position (Notch 6).
2. Move engine speed control to "FAST" (Rabbit) position.
3. Move ground speed control to slowest speed setting.
4. Proceed mowing slowly. If grass is very dense, lower each rear wheel latch one notch lower than the front wheel latches to improve recycling performance.

2.7 ADJUSTING FRONT DECK BAFFLE

The front of the cutting deck on these models has been modified with an open area. This allows the blade to have more direct contact with the grass and allows more air flow into deck chamber. The adjustable baffle should be secured in the lowest position when using a grass bag. The baffle should be secured in the highest position when mulching grass.

NOTE: Under certain conditions, when mulching, some grass may blow out from under front of baffle. This is normal but, the amount of grass blowing out can be reduced. Lower baffle slightly to reduce the amount of grass blow out.

1. Stop engine.
2. Loosen wing nuts that secure front deck baffle. See Figure 2.9.
3. Lower the adjustable baffle to the lowest position when using a grass bag. Raise the baffle to its highest position when mulching grass. Take care to keep the baffle's lower edge parallel to the bottom of the deck. See Figure 2.9.
4. Retighten wing nuts securely.

WARNING

DO NOT operate without entire Grass Catcher or guard in place. Grass Catcher components are subject to deterioration during normal use. Inspect frequently and replace worn or damaged components immediately.

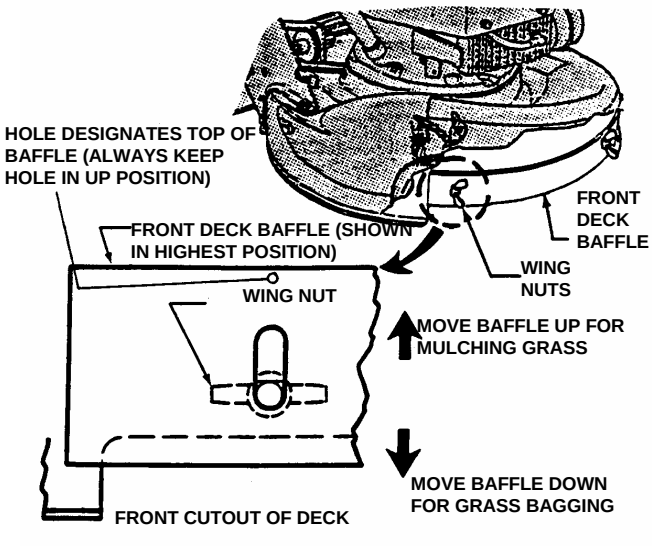

FIGURE 2.9

2.8 INSTALLATION of GRASS CATCHER (Optional Accessory)

Install grass catcher by sliding connector over flange of adapter. See Figure 2.10. Attach grass bag hooks over middle handle cross bar. See Figure 2.11.

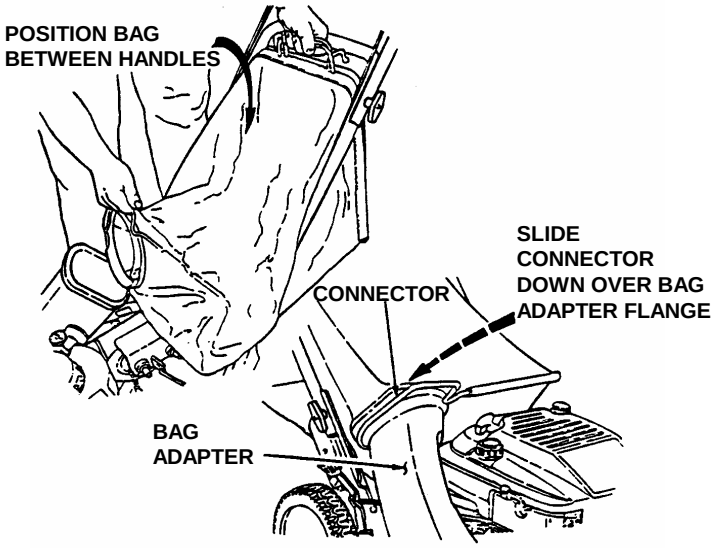

FIGURE 2.10

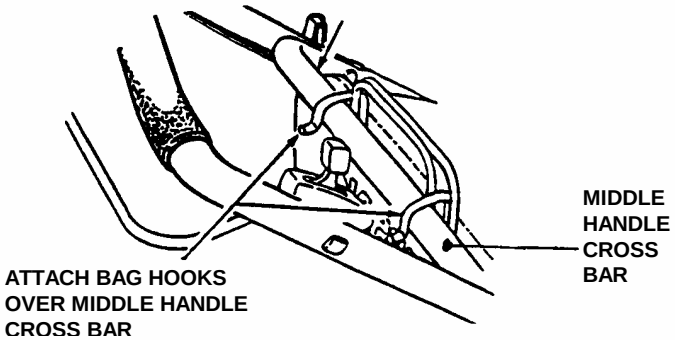

FIGURE 2.11

Section 2 - OPERATING INSTRUCTIONS

WARNING

DO NOT attempt any maintenance, adjustments or service with engine and blade running. STOP engine and blade. Disconnect spark plug wire and secure away from spark plug. Engine and components are HOT. Avoid serious burns, allow sufficient time for all components to cool.

2.8 INSTALLATION of DISCHARGE DEFLECTOR (Optional accessory on some models)

1. Remove front and rear nuts attaching recycling cover to deck. See Figure 2.10.

2. Install discharge deflector and secure to deck using hardware removed in Step 1. Slot in front edge of discharge deflector must be under nut as shown and both bolts protruding through holes in the side of the deflector. See Figure 2.11.

FIGURE 2.10

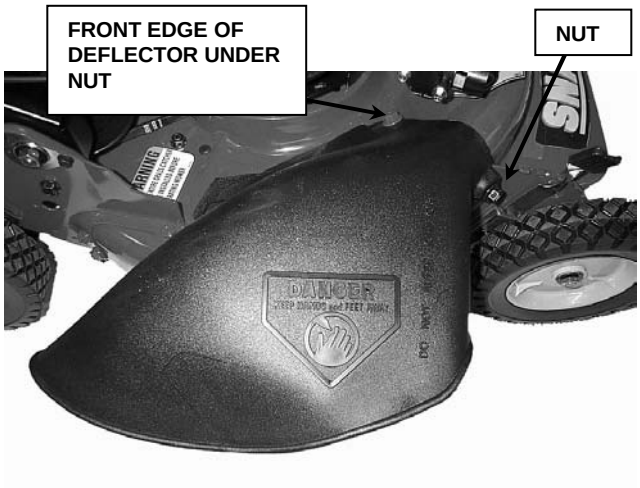

FIGURE 2.11

Section 3 – MAINTENANCE

3.1 INTRODUCTION

To retain the quality of the mower, use genuine SNAPPER replacement parts only. Contact a local SNAPPER dealer for parts and service assistance. For the correct part or information for a particular mower, always mention model and serial number.

3.2 SERVICE - AFTER FIRST 5 HOURS

3.2.1. CHANGE ENGINE OIL

WARNING

DO NOT attempt any maintenance, adjustments or service with engine and blade running. STOP engine and blade. Disconnect spark plug wire and secure away from spark plug. Engine and components are HOT. Avoid serious burns, allow sufficient time for all components to cool.

1. Refer to Engine Manual for proper oil specifications and procedures.

2. For simplest/cleanest oil change, loosen lower handle wing nuts and stand mower up on lower handle as shown in Figure 3.1. Drain oil through dipstick tube into a container.

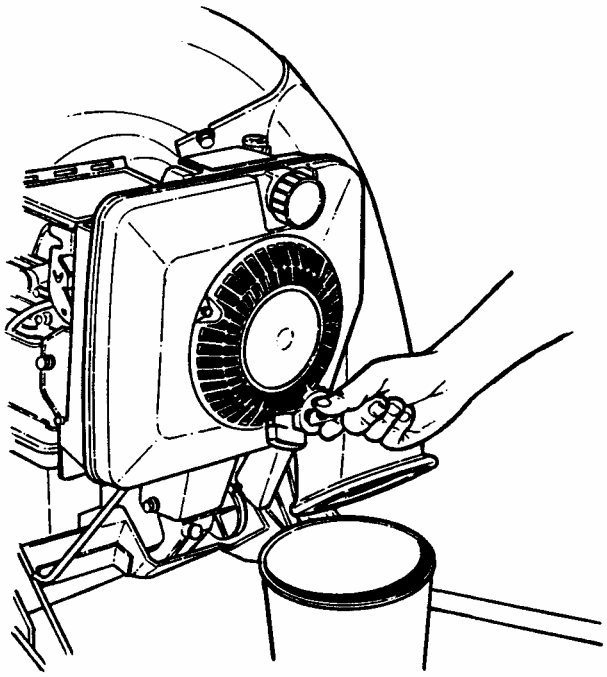

FIGURE 3.1

IMPORTANT: Drain fuel tank before tipping mower.

3.2.2. CHECK GREASE LEVEL IN TRANSMISSION

1. Remove transmission fill plug. Roll machine forward or backward while looking down into plug hole.

2. If liquid grease IS NOT visible on the input gear (the small gear below the plug hole), add an amount, to cover gear, of Snapper “00” grease. See Figure 3.2.

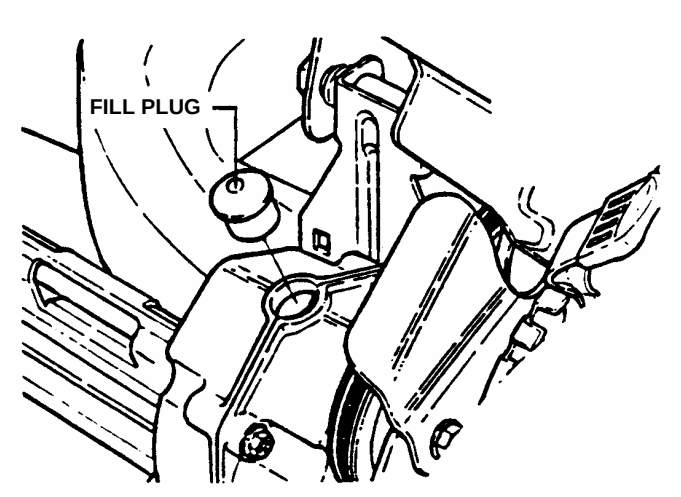

FIGURE 3.2

NOTE: Snapper “00” Grease (Part No. 2-9443) is available at your SNAPPER dealer.

(Continued on Next Page)

Section 3 – MAINTENANCE

3.2.2. CHECK GREASE LEVEL IN TRANSMISSION (Continued from previous page)

NOTE: Do not spill grease or oil on surface of drive disc. See Figure 3.3.

3. Reinstall transmission plug.

4. Check grease level after each 25 hours of operation.

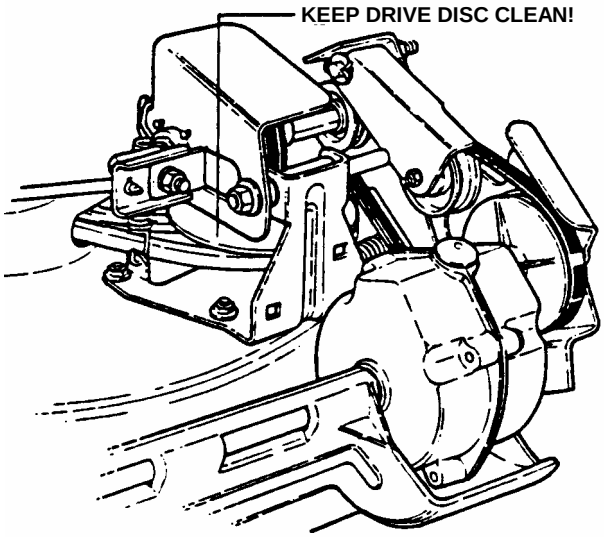

FIGURE 3.3

WARNING

DO NOT attempt any maintenance, adjustments or service with engine and blade running. STOP engine and blade. Disconnect spark plug wire and secure away from spark plug. Engine and components are HOT. Avoid serious burns, allow sufficient time for all components to cool. Wear heavy leather gloves when handling or working around cutting blades. Blades are extremely sharp and can cause severe injury.

IMPORTANT: Drain fuel tank before tipping mower. DO NOT tip machine with carburetor or spark plug down. Oil from crankcase will saturate the air filter and cause the engine to be hard to start or not start at all. If contamination does occur, the air filter will have to be replaced.

3.2.3. CHECK MOWER BLADE

1. Disconnect spark plug wire and secure end away from plug.

2. Tilt mower up on its rear wheels for access to the blade cap screw. Do not tilt mower with spark plug or carburetor down. See Figure 3.4.

3. Check torque of blade retaining cap screw. Recommended torque should be 40 ft. lbs. See Figure 3.4.

4. Check blade for sharpness, wear and damage. Refer to Section "Blade Wear Limits".

3.2.4. CHECK ENGINE DRIVE BELT

1. Visually check engine drive belt for cracking, fraying, severed or belt strands exposed. If worn or damaged, replace belt before operating mower.

3.2.5. CHECK TRANSMISSION POLY-V BELT

1. Visually check poly-v belt for cracking, fraying, severed or belt strands exposed. If worn or damaged, replace belt before operating mower.

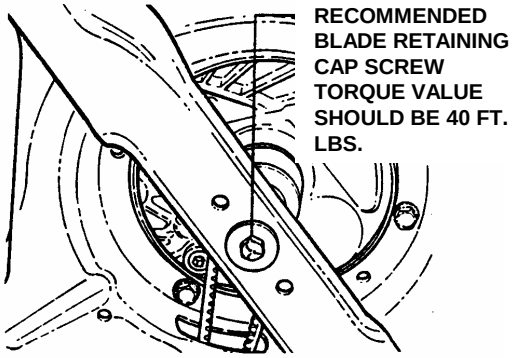

FIGURE 3.4

3.3 SERVICE - ANNUALLY

Perform all maintenance as described in the "Service Schedule" section of this manual.

3.3.1. Engine

Service engine according to engine owner's manual.

3.3.2. Air Filter

Refer to engine owner's manual for service instructions.

3.3.3. Engine Oil

Refer to engine owner's manual for service instructions.

3.4 STORAGE PROCEDURE

Refer to the Engine Owner's Manual for directions regarding engine storage preparations. Prepare the mower for "end of season" storage as follows:

1. Drain fuel from fuel tank and let engine run until all fuel is out of the carburetor.

2. Disconnect and remove the spark plug wire away from spark plug before any other preparations are made!

3. Tape all openings closed to prevent spraying water into exhaust or air intakes during washing.

4. Tilt mower up on its rear wheels and thoroughly clean the underside of the deck. Do not tilt mower with spark plug or carburetor down. Scrape away any accumulation of grass with a putty knife and or wire brush.

5. Lubricate all exposed metal with a light coating of oil to prevent corrosion.

6. On self-propelled models disconnect transfer rod clip and remove ground speed control rod before folding handles.

7. Loosen handle knobs. Carefully fold the handles forward, "flexing" the control cables to prevent cable damage.

8. Store the mower in a shed or other dry area, protected from weather.

Section 4 - REPAIR & ADJUSTMENTS

WARNING

DO NOT attempt any maintenance, adjustments or service with engine and blade running. STOP engine and blade. Disconnect spark plug wire and secure away from spark plug. Engine and components are HOT. Avoid serious burns, allow sufficient time for all components to cool. Wear heavy leather gloves when handling or working around cutting blades. Blades are extremely sharp and can cause severe injury.

4.1 MOWER BLADE REPLACEMENT

4.1.1. STANDARD BLADE WEAR LIMIT

1. Inspect blade frequently for signs of excessive wear or damage. See Figure 4.1.

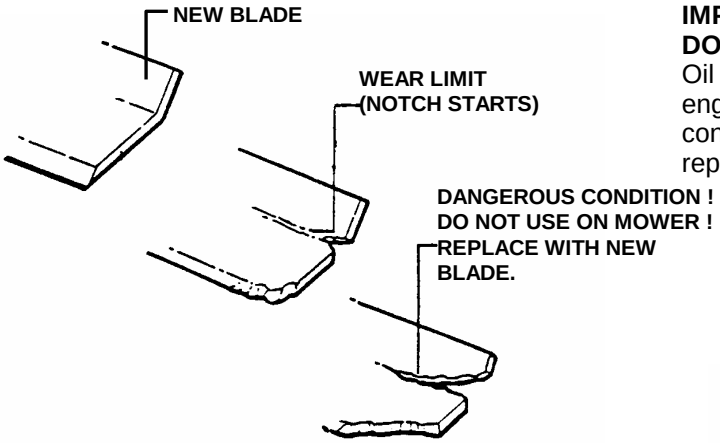

FIGURE 4.1

4.1.1.A. NINJA BLADE WEAR LIMIT

1. Inspect blade frequently for signs of excessive wear or damage. See Figure 4.2.

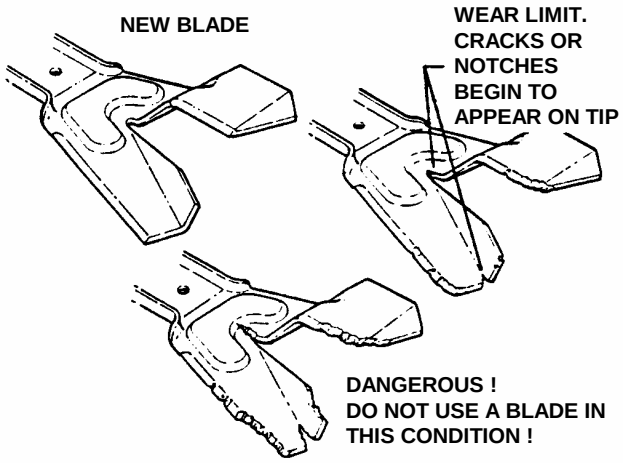

FIGURE 4.2

2. Replace the blade if it is badly chipped, bent, noticeably out of balance or has cracks or notch in either tip. See Figure 4.1 & 4.1A. Replace with new blade.

WARNING

DO NOT use a cutting blade that shows signs of excessive wear or damage. Refer to Section "MOWER BLADE REPLACEMENT" for proper blade inspection and service procedures.

4.1.2. BLADE SHARPENING

1. Disconnect spark plug wire and secure end away from plug.

IMPORTANT: Drain fuel tank before tipping mower. DO NOT tip machine with carburetor or spark plug down. Oil from crankcase will saturate the air filter and cause the engine to be hard to start or not start at all. If contamination does occur, the air filter will have to be replaced.

2. Tilt mower up on its rear wheels. Do not tilt mower with spark plug or carburetor down.

3. Remove blade. See Figure 4.3.

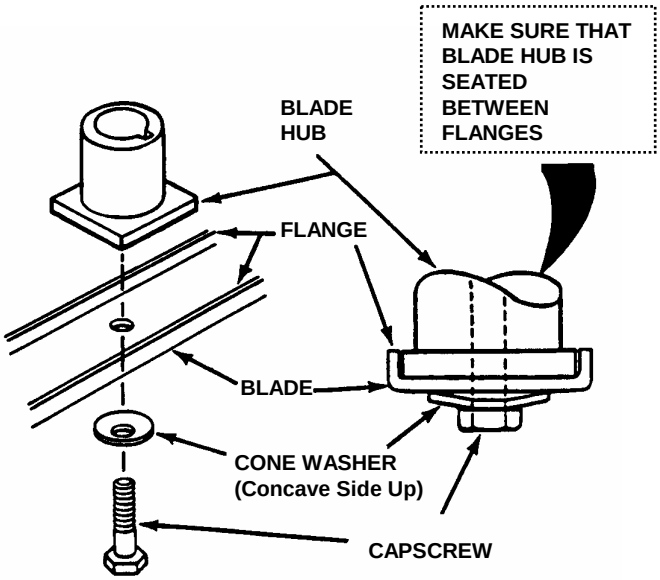

FIGURE 4.3

Section 4 - REPAIR & ADJUSTMENTS

WARNING

DO NOT attempt any maintenance, adjustments or service with engine and blade running. STOP engine and blade. Disconnect spark plug wire and secure away from spark plug. Engine and components are HOT. Avoid serious burns, allow sufficient time for all components to cool.

4. Sharpen blade on a grinding wheel at an angle of 22 to 28 degrees. DO NOT sharpen blade beyond original cutting edge. See Figure 4.4.

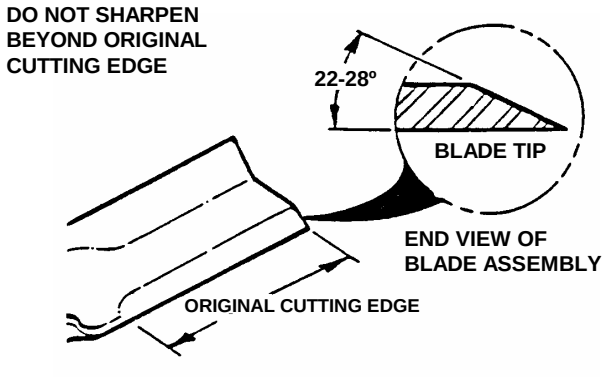

FIGURE 4.4

5. Check blade for balance. If necessary, correct balance by grinding heavy end of blade.
6. Reinstall blade. See Figure 4.1. Check torque of blade retaining cap screw. Recommended torque should be 40 ft. lbs.

NOTE: The following sections 4.2 through 4.4 are for self-propelled models only.

4.2 WHEEL DRIVE CONTROL ADJUSTMENT

1. The wheel drive control is properly adjusted when there is 1/16" to 1/8" clearance between the inside of the spring hook and the inside of the clutch cable eye with the wheel drive control released. See Figure 4.5.

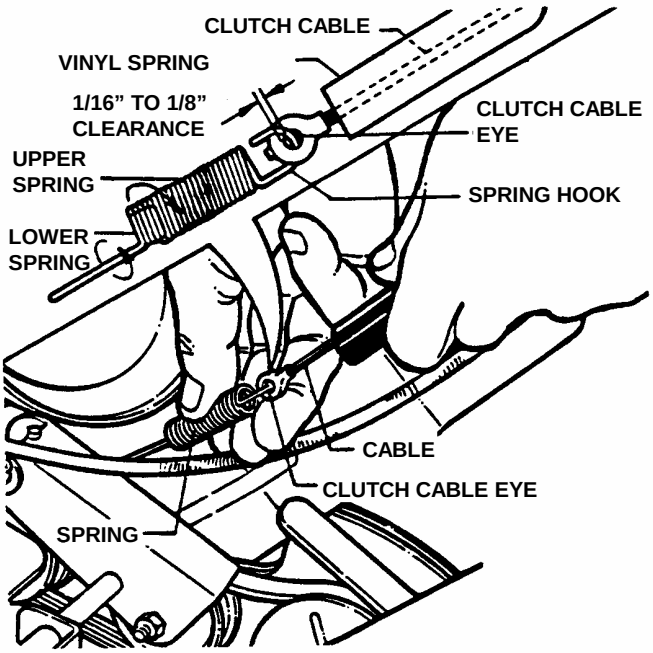

FIGURE 4.5

2. To adjust, unhook upper spring from cable eye and rotate spring in direction required to extend or shorten spring length.
3. Rehook upper spring to cable eye and check clearance. Repeat procedure if required.

NOTE: The vinyl spring cover should be kept over the spring at all times except for adjustments.

4. If the wheel drive control fails to return quickly to the "OFF" position when released, check for binding at the cable holdings located on the side of the right handle. The upper clip should be located 2" below the upper knob; the lower clip should be 4" above the lower knob. The cable should slide freely with the clips installed at these locations.

Section 4 - REPAIR & ADJUSTMENTS

WARNING

DO NOT attempt any maintenance, adjustments or service with engine and blade running. STOP engine and blade. Disconnect spark plug wire and secure away from spark plug. Engine and components are HOT. Avoid serious burns, allow sufficient time for all components to cool.

4.3 DRIVEN AND DRIVE DISC SERVICE

If the mower does not propel itself properly, See Figure 4.6. Check for the following problems:

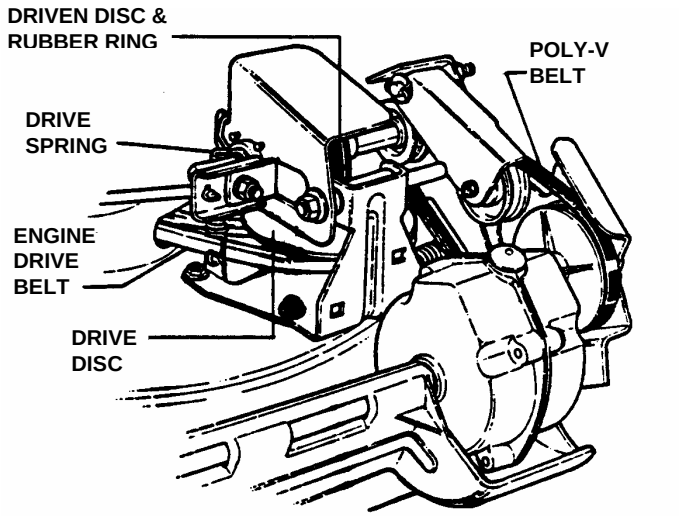

FIGURE 4.6

1. Grease on drive disc causing slippage.
2. Broken or disconnected drive spring.
3. Driven disc is out of adjustment.
4. Driven disc rubber is worn - does not contact drive disc properly.
5. Worn Poly-V Belt or engine drive belt.

NOTE: If any of the above (1 thru 5) are causing problems, service as follows:

4.3.1. Cleaning Drive Disc & Driven Disc.

If oil or grease on the drive disc or driven disc is causing slippage, clean discs as follows:
1. Wipe away any oil or grease with a clean cloth.
2. Use either an approved grease solvent or hot, soapy water to clean drive disc or driven disc.
3. Rinse components with clean water.
4. Dry components with a clean cloth.

4.3.2. Drive Spring Repair/Replacement

If drive spring is loose, reconnect as shown in Figure 4.7. If spring is broken, replace with new spring.

IMPORTANT: If machine drive system continues slipping see Trouble Shooting section.

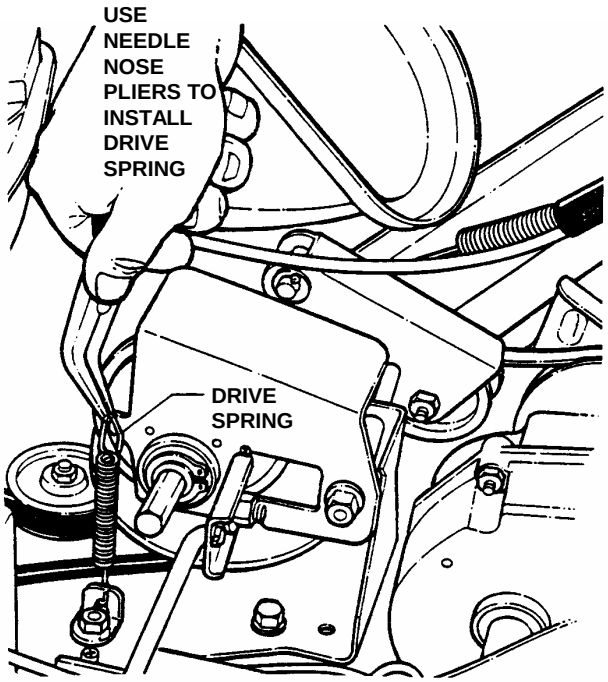

FIGURE 4.7

4.3.3. DRIVEN DISC ADJUSTMENT

If the drive disc and driven disc are clean and the mower drive is still slipping, adjust the driven disc as follows:
1. Place ground speed control in the number six speed position. See Figure 4.8.

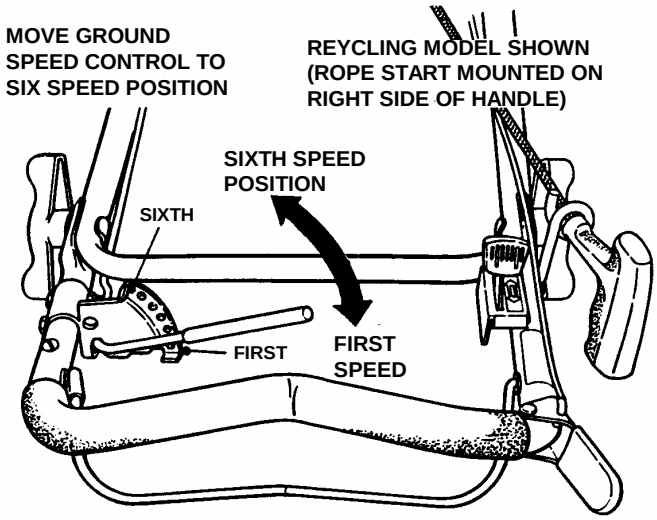

FIGURE 4.8

WARNING

DO NOT attempt any maintenance, adjustments or service with engine and blade running. STOP engine and blade. Disconnect spark plug wire and secure away from spark plug. Engine and components are HOT. Avoid serious burns, allow sufficient time for all components to cool.

4.3.3. DRIVEN DISC ADJUSTMENT (Continued From Previous Page)

2. Remove driven disc spring from driven disc assembly. Loosen connector hex nut. See Figure 4.9.

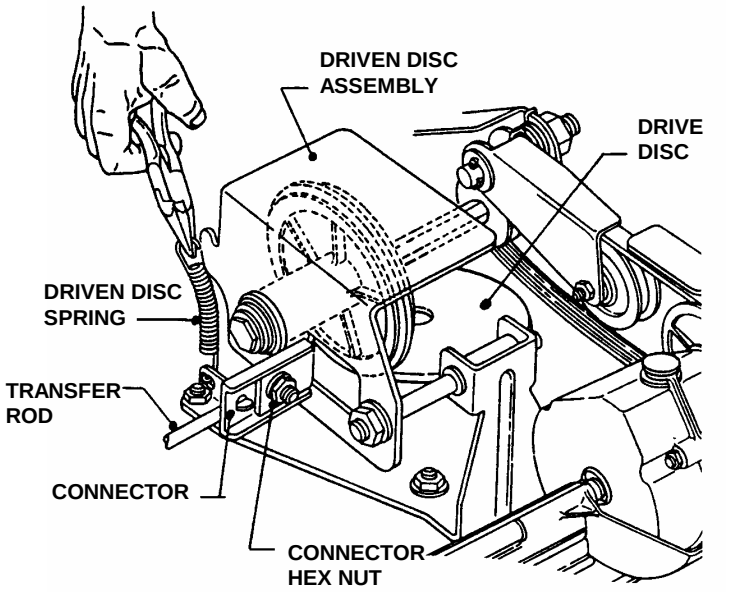

FIGURE 4.9

3. Slide driven disc assembly over to 1/8" from outside edge of drive disc. Maintaining the 1/8" measurement, remove any looseness from the linkage. This can be done by holding the transfer rod and applying pressure to the left (as viewed from operators position). Then retighten the connector hex nut securely. See Figure 4.10. Move ground speed control to the first speed position, then back to the sixth speed position. Recheck the 1/8" measurement described previously. Reinstall driven disc spring to driven disc assembly.

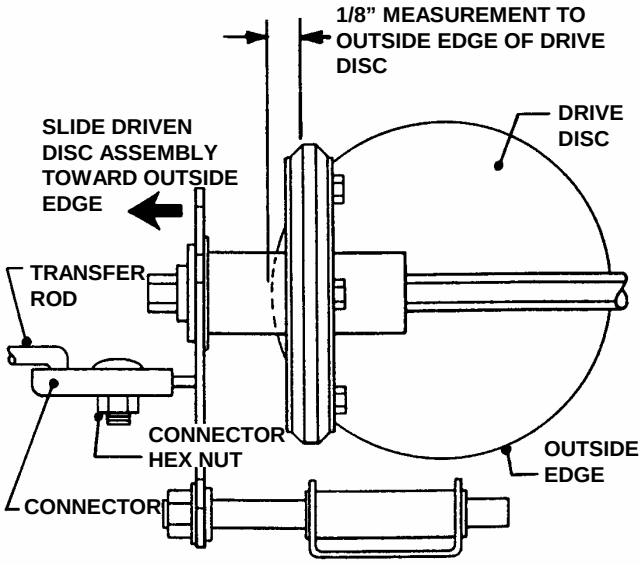

FIGURE 4.10

4.3.4. Replacing Rubber Driven Disc

If the rubber is badly chunked or worn it must be replaced. Install new Driven Disc as follows:

1. Using a small flat blade screwdriver, free the clip from the transfer rod. Then remove the transfer rod from the clip and the speed control rod. See Figure 4.11.

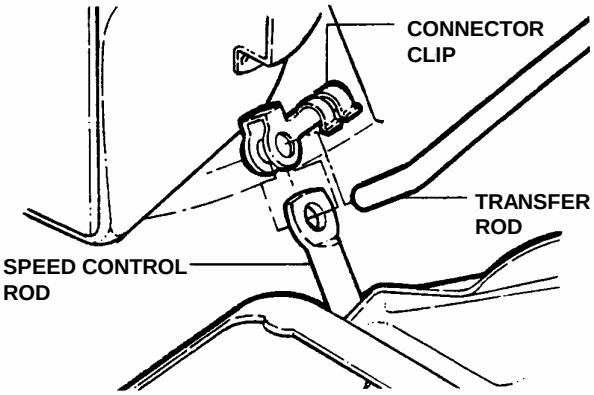

FIGURE 4.11

WARNING

DO NOT attempt any maintenance, adjustments or service with engine and blade running. STOP engine and blade. Disconnect spark plug wire and secure away from spark plug. Engine and components are HOT. Avoid serious burns, allow sufficient time for all components to cool.

4.3.4. Replacing Rubber Driven Disc
(Continued from previous page)

2. Using needle nose pliers, unhook the drive spring and slide the driven disc assembly off the hex shaft. See Figure 4.12.

3. Remove the two snap rings which secure the rubber driven disc to the driven disc assembly. See Figure 4.13.

4. Install new rubber driven disc onto driven disc assembly with retaining rings.

5. Reverse above procedures for reassembly and installation of driven disc assembly.

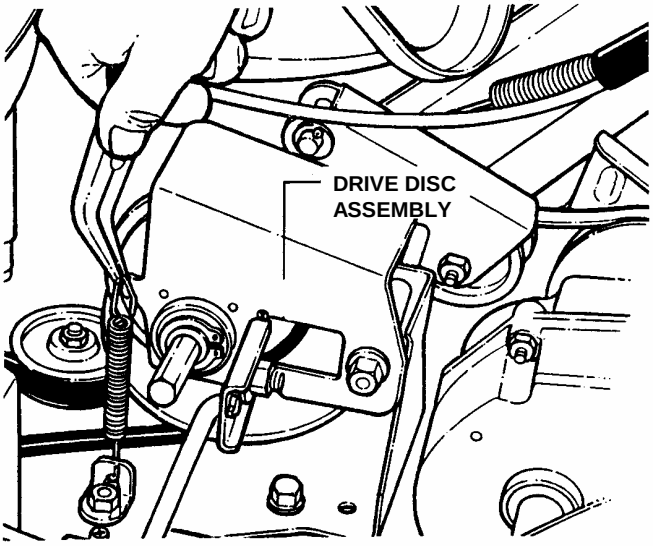

FIGURE 4.12

4.3.5. Replacing Bearing In Driven Disc Assembly

IMPORTANT: The bearing, on these "M" series machines, is staked into the thrust plate. The bearing will have to be driven out with a mallet and a large punch. A new bearing with four retaining screws will have to be purchased to replace existing bearing.

If the driven disc bearing requires replacement, remove the driven disc assembly and replace bearing as follows:

1. Using a small flat blade screwdriver, free the clip from the transfer rod. Then remove the transfer rod from the clip and the speed control rod. See Figure 4.11.

2. Using needle nose pliers, unhook the drive spring and slide the driven disc assembly off the hex shaft. See Figure 4.12.

3. Remove both snap rings that secure rubber driven disc hub to thrust plate. See Figure 4.13.

4. Slide the rubber driven disc hub out of the bearing.

5. Drive out existing bearing.

6. Install new bearing and secure to thrust plate with four retaining screws. Tighten screws securely.

7. Reassemble components in reverse order.

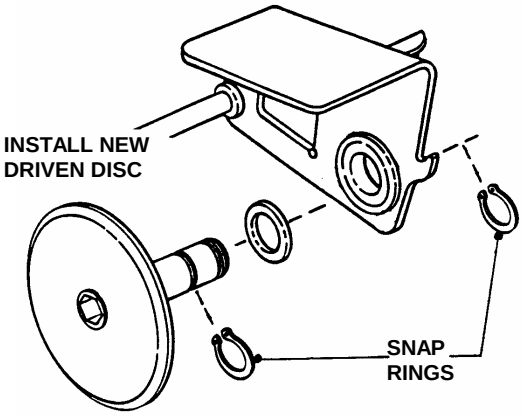

FIGURE 4.13

Section 4 - REPAIR & ADJUSTMENTS

WARNING

DO NOT attempt any maintenance, adjustments or service with engine and blade running. STOP engine and blade. Disconnect spark plug wire and secure away from spark plug. Engine and components are HOT. Avoid serious burns, allow sufficient time for all components to cool.

4.3.6. Replacement Of Bearing On Pulley End Of Hex Shaft

To replace the bearing on the pulley end of the hex shaft, proceed as follows:

1. Hold the hex shaft with an adjustable wrench held next to the pulley.

2. Remove the 3/8" hex lock nut which is located on the outside of the right wheel bracket. See Figure 4.14.

3. Remove holder, O-ring and bearing.

4. Install new bearing.

5. Carefully install new O-ring over the outside of the new bearing.

6. Install bearing holder and secure with screws.

7. Install 3/8" hex lock nut.

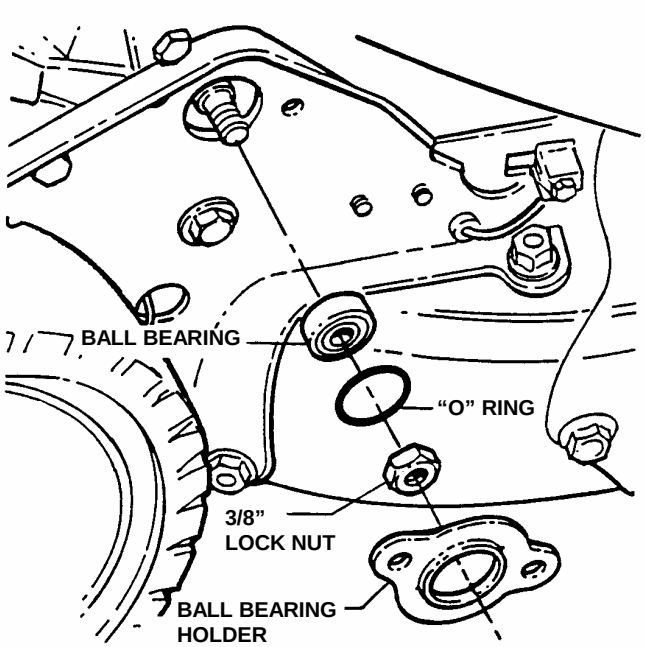

FIGURE 4.14

4.4 BELT SERVICE

On self-propelled mowers, the engine belt transmits power from engine to drive disc. The drive disc powers the poly-v belt which engages the transmission that powers the rear wheels. Should these belts become worn, they could cause slippage which would impair mower performance. The condition of the engine belt and poly-v belt should be checked after every 25 hours of mower operation.

4.4.1. Engine Drive Belt Replacement (Stretch Type Belts)

1. Empty the fuel tank.

2. Note the belt routing in Figure 4.15. There is no idler pulley on these models to disconnect. See Figure 4.15.

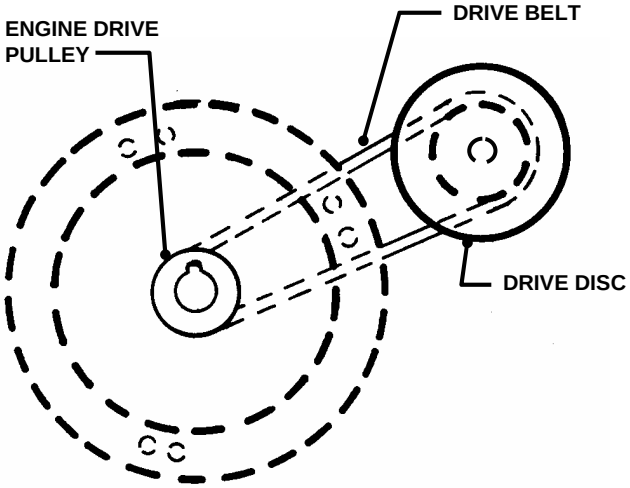

TOP VIEW OF STRETCH TYPE BELT ROUTING

FIGURE 4.15

Section 4 - REPAIR & ADJUSTMENTS

WARNING

DO NOT attempt any maintenance, adjustments or service with engine and blade running. STOP engine and blade. Disconnect spark plug wire and secure away from spark plug. Engine and components are HOT. Avoid serious burns, allow sufficient time for all components to cool.

4.4.1. Engine Drive Belt Replacement (Stretch Type Belts) (Continued From Previous Page)

IMPORTANT: Drain fuel tank before tipping mower. DO NOT tip machine with carburetor or spark plug down. Oil from crankcase will saturate the air filter and cause the engine to be hard to start or not start at all. If contamination does occur, the air filter will have to be replaced.

3. Remove the driven disc. Refer to Section "Replacing Rubber Driven Disc" for driven disc assembly removal procedure.
4. Tilt mower up on its rear wheels and remove blade and blade hub. Assistance from another person may be necessary to hold mower in the tilted position.
5. Hold the slotted end of the drive disc bolt with a screwdriver and remove the nut and internal tooth lock washer. See Figure 4.16.
6. Remove the belt cover located under deck.
7. Lift the drive disc up and remove worn belt.
8. Loop one end of new belt over engine pulley and insert the other end through slot in deck. See Figure 4.15.

PULLEY POSITION

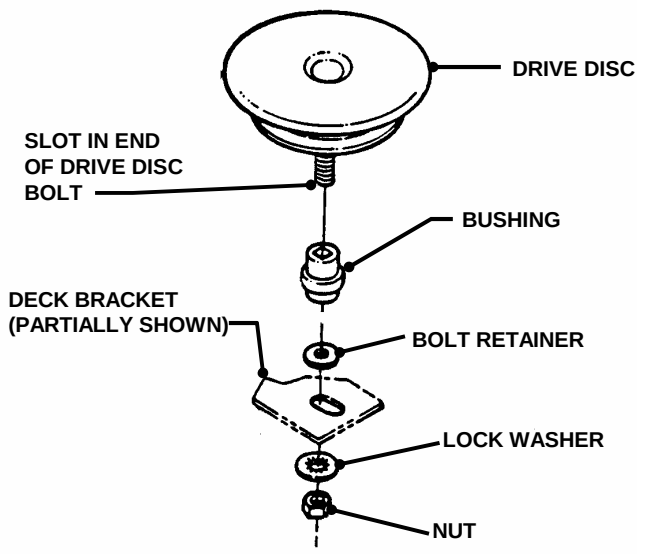

FIGURE 4.16

4.4.2. Transmission Poly-V Belt Replacement

1. Remove the driven disc. Refer to Section on "Replacing Driven Disc Rubber Ring" for procedure.
2. Note the routing of the old belt around the three pulleys before removing it. See Figure 4.17.
3. Place new Poly-V Belt over end of hex shaft and onto driven pulley.
4. Work belt onto top of idler pulley.
5. Twist belt sideways and pull it upward between the differential bracket and drive pulley and then down into the pulley groove. Make sure the Poly-V Belt is above belt guide. See Figure 4.17.

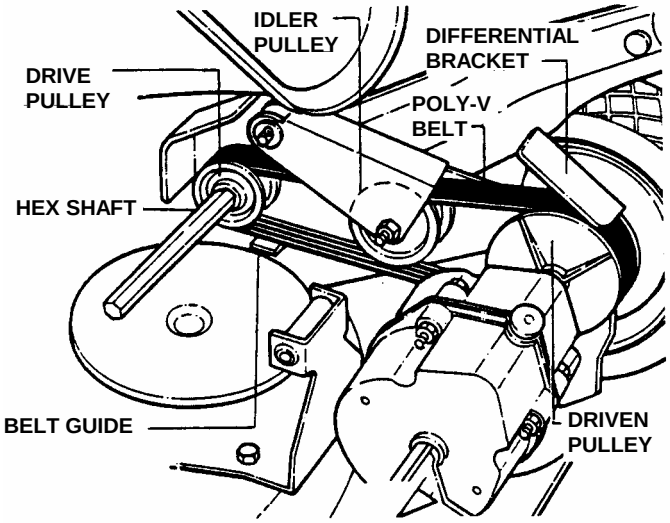

ROUTING OF POLY-V BELT

FIGURE 4.17

TROUBLESHOOTING

PROBLEM	PROBABLE CAUSE	CORRECTIVE ACTION
Engine Will Not Start Using Recoil Starter	1. Fuel tank empty.	1. Fill fuel tank with fresh fuel.
	2. Engine needs choking or priming.	2. Choke/Prime. Check Engine Manual for Instructions.
	3. Spark plug wire disconnected.	3. Place spark plug wire onto spark plug.
Engine Stalls or Stops After Running	1. Blade control is released or is not being held securely against handle.	1. Blade control should be held securely against handle at all times during operation of mower.
	2. Fuel tank empty.	2. Fill with fuel to proper level.
	3. Engine air pre-cleaner and or air cleaner dirty.	3. Clean free of all debris.
	4. Spark plug defective or gap set improperly.	4. Service spark plug.
	5. Water, debris or stale fuel in fuel system.	5. Drain and clean fuel system.
Engine Loses Power	1. Engine air pre-cleaner or air cleaner dirty	1. Clean or replace filters.
	2. Spark plug faulty.	2. Service spark plug.
	3. Water, debris or stale fuel in fuel system.	3. Drain and clean fuel system.
Excessive Vibration	1. Damaged, out of balance or bent mower blade.	1. Service mower blade.
	2. Loose blade components.	2. Service and tighten loose parts.
	3. Loose or missing air lift (if equipped).	3. Replace air lifts. Tighten to proper torque.
	4. Lumpy or frayed belt	4. Replace belt.
Mower Will Not Move	1. Damaged transmission	1. Contact authorized **SNAPPER** dealer.
Loss Of Traction	2. Traction drive belt requires replacement	2. Replace traction drive belt.
(Self-Propelled Models)	3. Driven disc slipping	3. Clean or replace driven disc.
Cutting Grass Improperly	1. Cutting height too low or high.	1. Adjust cutting height.
	2. Engine speed too slow.	2. Move engine speed control to “FAST” position.
	3. Forward ground speed too fast.	3. Move ground speed control to a slower speed.
	4. Terraced cut, side to side.	4. Adjust height of cut with height adjust levers.
	5. Excessive deck pitch, front to rear.	5. Adjust height of cut with height adjust levers.
	6. Cutting blade dull or damaged.	6. Sharpen cutting edges or replace blade.
Poor Grass Discharge	1. Engine speed too slow.	1. Move engine speed control to “FAST” position.
	2. Forward speed too fast.	2. Move ground speed control to a slower speed.
	3. Grass is wet.	3. Mow when grass is dry.
	4. Excessively worn or damaged blade.	4. Service mower blade.
	5. Build up of grass clippings and debris under deck.	5. Clean deck.
	6. Improper blade installed on deck.	6. Install proper **SNAPPER** blade.
	7. Blade installed improperly on deck.	7. Install blade properly.
Oil Leaking	1. Leaking engine case.	1. Contact authorized **SNAPPER** dealer. 2. Check and tighten drain plug. 3. Make sure dip stick or oil filler cap is securely in place.

SERVICE SCHEDULE

ITEM	SERVICE PERFORMED	REF.	EACH USE	5 HRS	25 HRS	50 HRS	100 HRS	EACH SEASON
Engine Oil	Check Oil Level	Page 6	**X**					
	Initial Oil Change	Page 10		**X**				
	Periodic Oil Change	Page 11			**X***			
Air Pre-Cleaner	Clean Sponge Element	Engine Manual & Page 11			**X****			
Air Cleaner	Clean or Replace	Engine Manual			**X****			
Spark Plug	Replace	Engine Manual					**X**	
Engine Cooling System	Clean Shroud & Fins	Engine Manual					**X****	
Drive Belts	Check For Wear And Tension	Page 17-18			**X**	**X**		**X**
Mower Blade	Check For Wear, Damage & Replacement	Page 13	**X**					
Mower Deck	Clean Debris Accumulation	Page 11	**X**					
Transmission Grease	Check Grease Level	Pages 10			**X**			**X**
	Periodic Grease Check	Pages 11						**X**
Drive Disc	Check for Wear Damage & Replacement	Page 13-16				**X**		

***Change oil every 25 hours when operating under heavy load or high temperatures.
****Clean more often under dusty conditions or when air debris is present

4.5 MAINTENANCE/REPLACEMENT PARTS

MAINTENANCE PARTS	
Engine Speed Control (Briggs Engines)	**2-9036**
Blade Control Cable	**2-5036**
Clutch Pull Cable (See Parts Manual)	**2-5013**
Cutter Blade (Air Lift Compatible)	**1-9795**
Cutter Blade (Mulching)	**1-7168**
Cutter Blade (Not Air Lift Compatible)	**2-6691**
Cutter Blade (Ninja - Quad Edge)	**2-6407**
Wheel Drive Pulley to Transmission Pulley Belt	**1-2354**
Engine to Drive Disc Belt	**4-6784**
Rubber Drive Tire	**2-3364**
Parts Manual for 21" Steel Deck Walk Behind Mower "F" Models, Series 17	**06136**

SNAPPER®

3 YEAR LIMITED WARRANTY

For three (3) years from purchase date for the original purchaser's residential, non-commercial use, **SNAPPER**, through any authorized **SNAPPER** dealer will replace, free of charge (except for taxes where applicable), any part or parts found upon examination by the factory at McDonough, Georgia, to be defective in material or workmanship or both.

For ninety (90) days from purchase date for the original purchaser's commercial, rental, or other non-residential use, **SNAPPER**, through any authorized **SNAPPER** dealer will replace, free of charge, any part or parts found upon examination by the factory at McDonough, Georgia, to be defective in material or workmanship or both.

All transportation costs incurred by the purchaser in submitting material to an authorized **SNAPPER** dealer for replacement under this warranty must be paid by the purchaser.

This warranty does not apply to engines and their components, and batteries, as these items are warranted separately. This warranty does not apply to parts that have been damaged by accident, alteration, abuse, improper lubrication, normal wear, or other cause beyond the control of **SNAPPER**. This warranty does not cover any machine or component part that has been altered or modified changing safety, performance, or durability.

Batteries have a one (1) year prorated warranty period with free replacement if required during the first ninety (90) days from the original purchase date. **SNAPPER** will not be responsible for any installation cost incurred. The battery warranty only covers original equipment batteries and does not cover damage to the battery or machine caused by neglect or abuse, destruction by fire, explosion, freezing, overcharging, improper maintenance, or use of improper electrolyte.

There is no other express warranty.

DISCLAIMER OF WARRANTY

Implied warranties, including those of merchantability and fitness for a particular purpose, are limited to three (3) years from purchase date for the original purchaser's residential or other non-commercial use, and ninety (90) days from purchase for the original purchaser's commercial, rental or other non-residential use, and to the extent permitted by law, any and all implied warranties are excluded. This is the exclusive remedy. Liabilities for consequential damages, under any and all warranties are excluded.

Some states do not allow limitations on how long an implied warranty lasts, or do not allow the exclusion or limitation of incidental or consequential damages, so the above limitation or exclusion may not apply to you.

This warranty gives you specific legal rights, and you may also have other rights which vary from state to state.

WARNING: THE USE OF REPLACEMENT PARTS OTHER THAN GENUINE SNAPPER PARTS MAY IMPAIR THE SAFETY OF SNAPPER PRODUCTS AND WILL VOID ANY LIABILITY AND WARRANTY BY SNAPPER ASSOCIATED WITH THE USE OF SUCH PARTS.

IMPORTANT: Please fill out the attached **SNAPPER** Product Registration Card immediately and mail to:
Snapper's Product Registration Center, P.O. Box 1379, McDonough, Georgia 30253

SNAPPER® vs. DIRT!

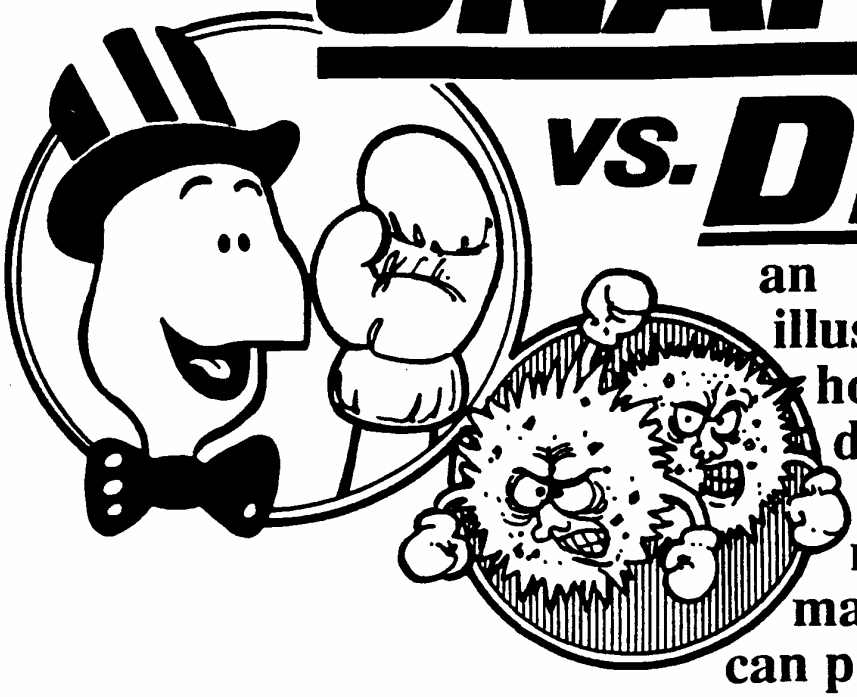

an illustration of how dirt can damage your engine & how reasonable maintenance can protect it!

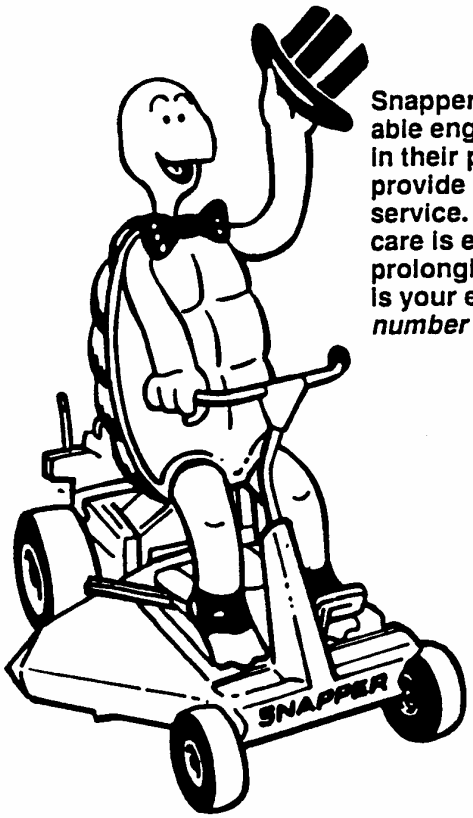

Snapper uses the best available engines and components in their products in order to provide long, satisfactory service. However, proper care is essential in prolonging engine life. Dirt is your engine's *enemy number 1!*

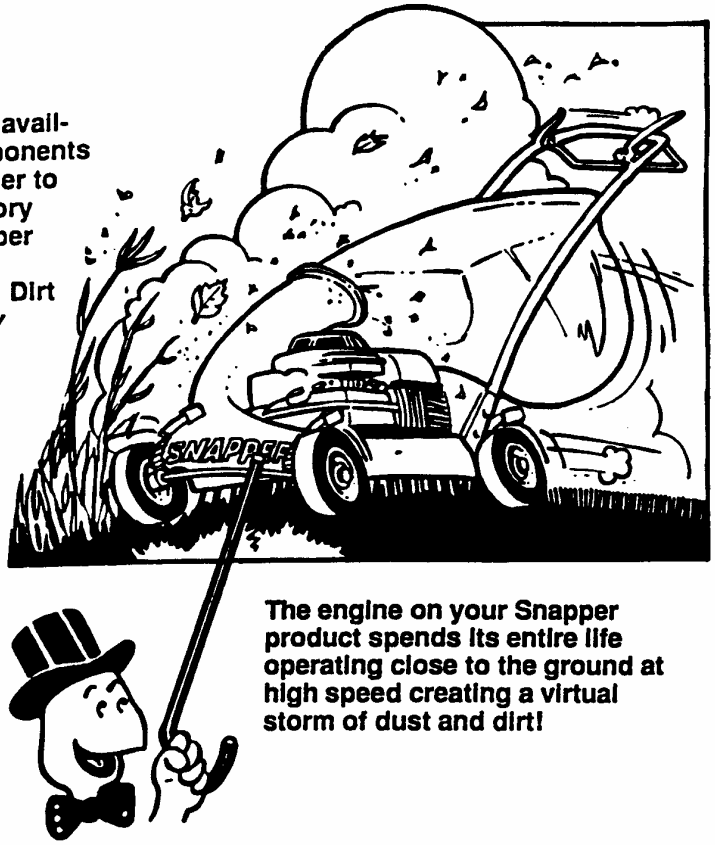

The engine on your Snapper product spends its entire life operating close to the ground at high speed creating a virtual storm of dust and dirt!

PRIMARY MAINTENANCE

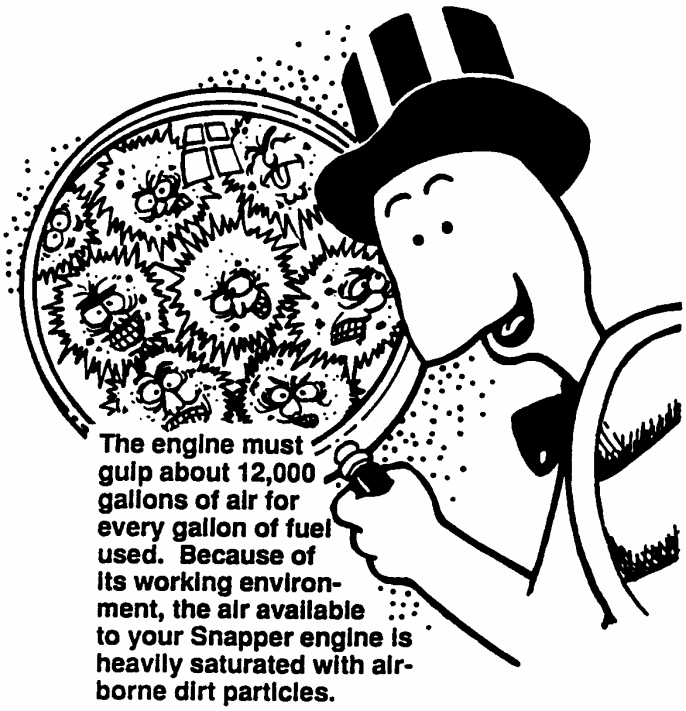

The engine must gulp about 12,000 gallons of air for every gallon of fuel used. Because of its working environment, the air available to your Snapper engine is heavily saturated with airborne dirt particles.

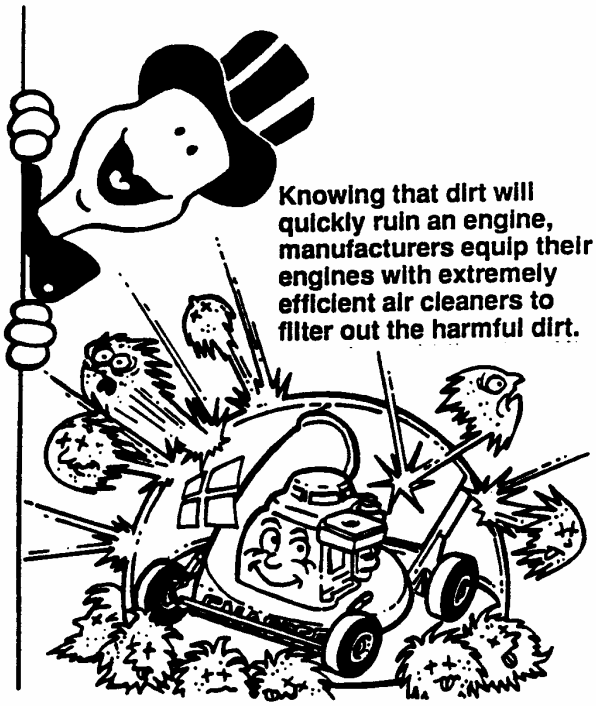

Knowing that dirt will quickly ruin an engine, manufacturers equip their engines with extremely efficient air cleaners to filter out the harmful dirt.

As the dirt particles are stopped, they build up and begin to clog the outside of the filter. This reduces the amount of air available to the engine and causes an over-rich fuel mixture which results in the following adverse effects:

An improperly serviced, dirt clogged air cleaner will:

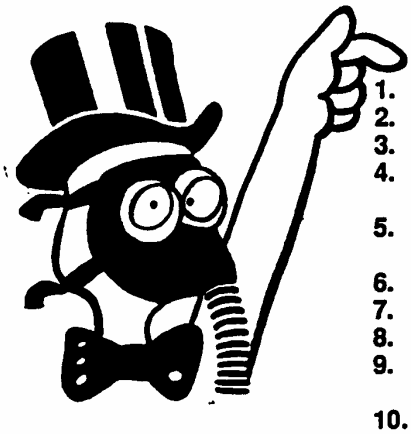

1. increase fuel consumption
2. cause power loss
3. result in hard starting
4. create smoke from unburned fuel
5. produce carbon build-up internally
6. foul spark plug electrodes
7. score cylinder walls
8. burn valves
9. wear out the engine prematurely
10. COST YOU MONEY!

Damage caused by a poorly serviced air cleaner is not covered under the engine warranties. So, save yourself unnecessary expenses and undue aggravation by keeping the air cleaner properly serviced at the intervals specified in the engine owner's manual.

It doesn't take long to service an air cleaner. Follow the specific instructions in the engine owner's manual for the type filter used. Prevent dirt from falling into the carburetor intake when servicing your air cleaner. Make sure components are installed in correct sequence after servicing to prevent unfiltered air from entering the engine. Some servicing hints on several common types are:

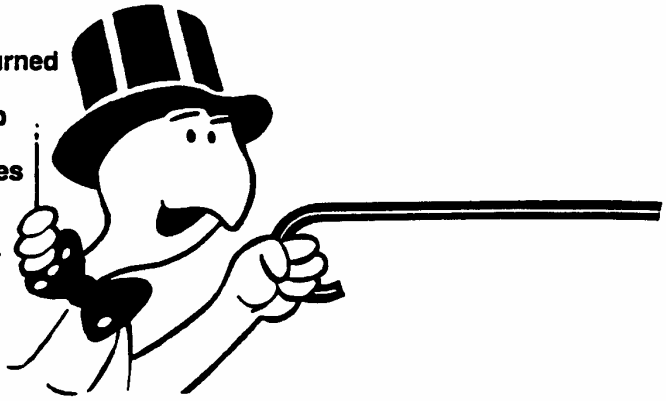

PRIMARY MAINTENANCE

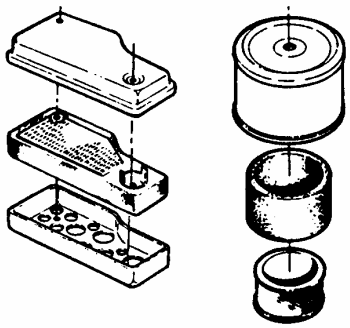

Generally, wash foam-type filters in a dishwashing detergent and water solution. Rinse and wring dry, then saturate with oil and squeeze out excess. *Failure to re-oil this type filter will ruin the engine.*

Clean paper elements by tapping lightly. Blowing with air will rupture paper elements.

Use a flashlight to detect clogged or torn paper elements - replace if damaged in any way.

Air is also needed to keep your engine cool. Dirt, dust & debris build up to restrict and clog cooling air intake screens and fins. Clean screens and fins at frequent intervals. The engine blower housing and shrouds should be removed at least once each season or more often under dry, dusty conditions for a thorough cleaning of fins.

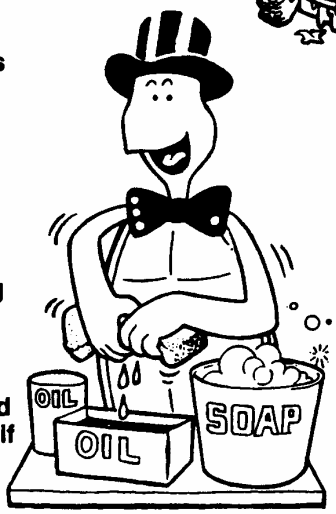

Failure to keep external surfaces clean not only presents fire hazards, but causes overheating and resulting engine damages such as:

1. distorted valve guides
2. sticking valves
3. scuffed, scored cylinder walls
4. overspeeding
5. loss of power
6. complete failure of engine.

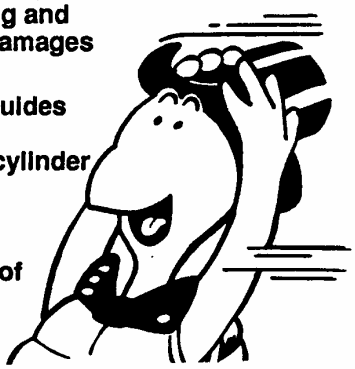

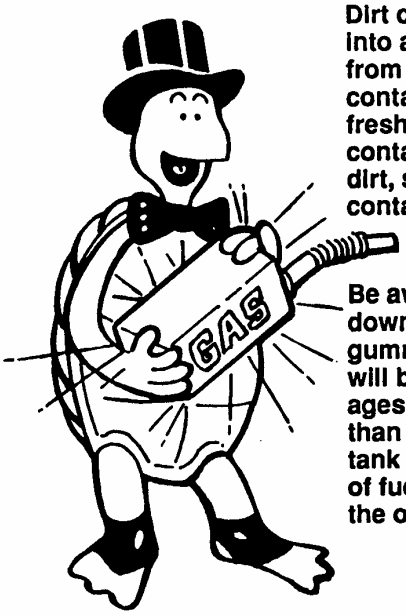

Dirt can also be introduced into an engine in dirty fuel from a contaminated container. Always use clean fresh fuel from a clean container to guard against dirt, sludge and water contamination.

Be aware that fuel breaks down in storage and forms gummy compounds which will block carburetor passages. Never use fuel more than 3 months old. Drain tank then run the engine out of fuel before storing during the off-season.

An engine must also have proper lubrication. All engines use some oil. On 4-cycle engines, CHECK OIL LEVEL BEFORE EACH START-UP. Wipe area clean around the oil check plug or dipstick opening to keep dirt from falling into the engine when checking the oil. Always check with the machine on a level surface. On engines with dipstick, keep the level up to, but not over, the FULL mark. When adding oil, allow time for all of the oil to flow down the fill tube to prevent a false full reading when the level could actually be low and result in engine damage.

PRIMARY MAINTENANCE

On 4-cyle engines with an oil level plug, don't be fooled into thinking the engine has sufficient lubricating oil if you can see "some" oil in the opening - the level should always be brought up to the point of overflowing at the top of the fill hole.

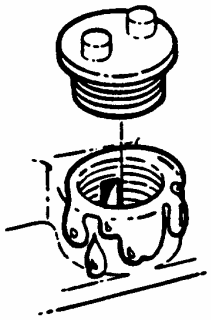

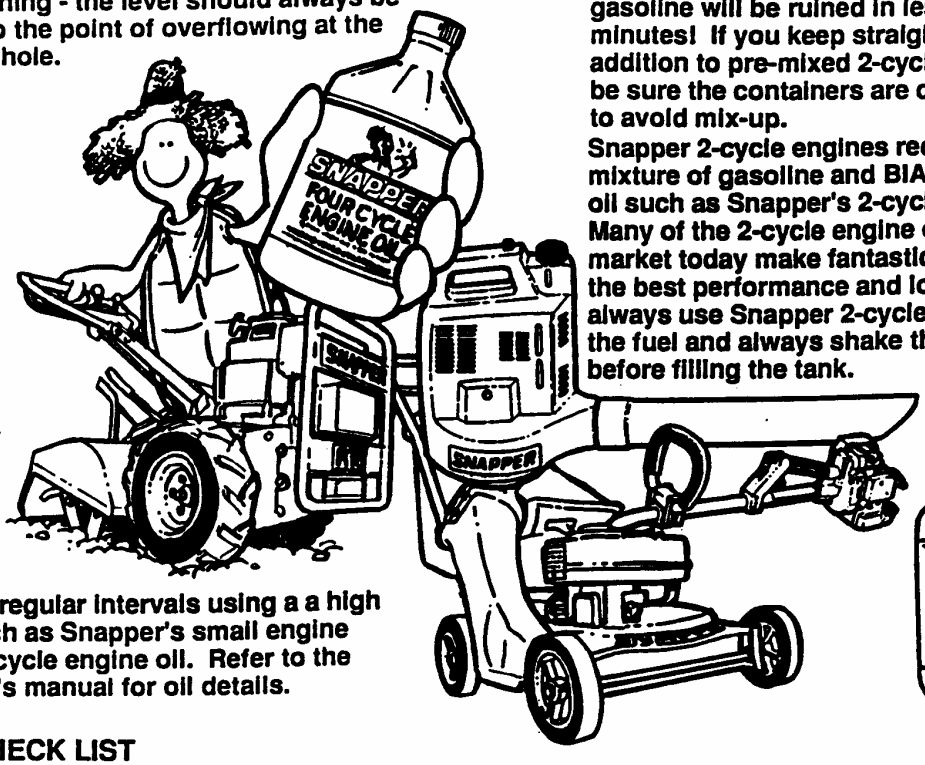

On 2-cycle engines, lubrication must be provided by an exact mixture of gasoline and 2-cycle air-cooled engine oil. A 2-cycle engine that is mistakenly run on straight gasoline will be ruined in less than 5 minutes! If you keep straight gasoline in addition to pre-mixed 2-cycle engine fuel, be sure the containers are clearly marked to avoid mix-up.

Snapper 2-cycle engines require a 32 to 1 mixture of gasoline and BIA certified TC-W oil such as Snapper's 2-cycle engine oil. Many of the 2-cycle engine oils on the market today make fantastic claims, but for the best performance and long engine life, always use Snapper 2-cycle oil. Pre-mix the fuel and always shake the container before filling the tank.

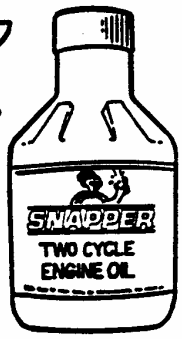

Change oil at regular intervals using a a high quality oil such as Snapper's small engine formulated 4-cycle engine oil. Refer to the engine owner's manual for oil details.

STARTING CHECK LIST

1.	Engine Oil	• To full level (4-cycle) • Properly mixed with gas (2 cycle)
2.	Air Cleaner	• Clean and properly serviced • Full fresh clean gasoline
3.	Fuel Tank	• Fuel valve open • Cap vent open • Inline filter clean
4.	Choke	• Operating properly
5.	Primer (on some engines)	• Used properly
6.	Safety Interlock Switches	• In proper position • All wires properly connected
7.	Switch & Blade Control	• Switch On • Blade control properly positioned on walk mower
8.	Spark plug	• Wire connected • Good connection
9.	Throttle control	• Start position
10.	Blade	• Properly installed and torqued • Sharpened
11.	Muffler	• Good condition • Not clogged • Grass & leaves cleaned away

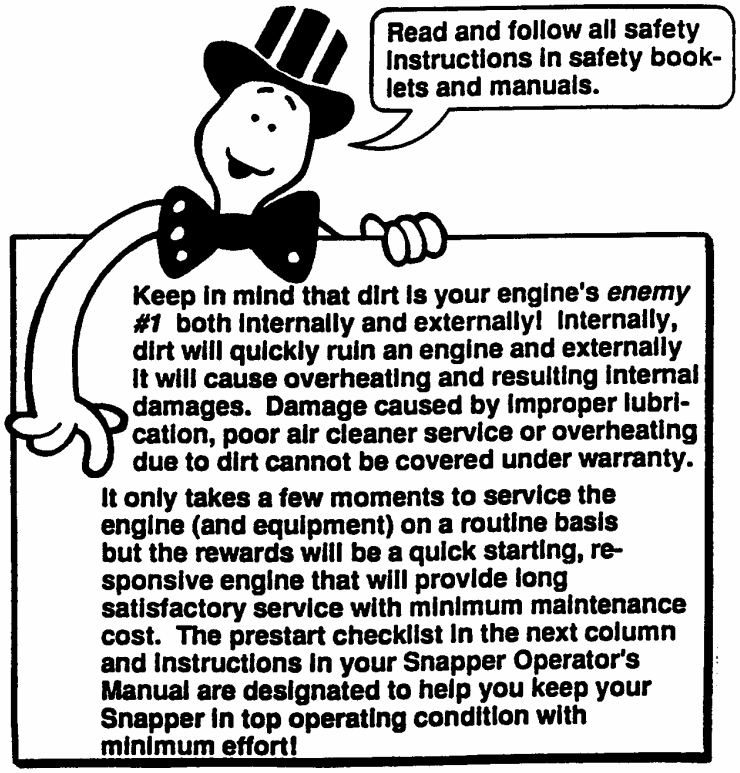

NOTES

NOTES

NOTES

Safety Instructions & Operator's Manual for

SNAPPER®

21" STEEL DECK WALK BEHIND MOWERS SERIES 17

IMPORTANT

Snapper products are built using engines that meet or exceed all applicable emissions requirements on the date manufactured. The labels on those engines contain very important emissions information and critical safety warnings. Read, Understand, and Follow all warnings and instructions in this manual, the engine manual, and on the machine, engine and attachments. If you have any questions about your Snapper product, contact your local authorized Snapper dealer or contact Snapper Customer Service at Snapper, McDonough, GA. 30253. Phone: (1-800-935-2967).

⚠ WARNING

BATTERY POSTS, TERMINALS AND RELATED ACCESSORIES CONTAIN LEAD AND LEAD COMPOUNDS, CHEMICALS KNOWN TO THE STATE OF CALIFORNIA TO CAUSE CANCER AND BIRTH DEFECTS OR OTHER REPRODUCTIVE HARM. WASH HANDS AFTER HANDLING.

⚠ WARNING

ENGINE EXHAUST, SOME OF ITS CONSTITUENTS, AND CERTAIN VEHICLE COMPONENTS CONTAIN OR EMIT CHEMICALS KNOWN TO THE STATE OF CALIFORNIA TO CAUSE CANCER OR OTHER REPRODUCTIVE HARM.

SNAPPER® McDonough, GA., 30253 U.S.A.

COPYRIGHT © 2001
SNAPPER INC.
ALL RIGHTS RESERVED

MANUAL No. 7-4352 (I.R. 2/13/01)